CMP 334 Computer Organization

Course syllabus

Basic computer model

Basic processor model

Integers base ten and base 2

Boolean algebra

Before next class

- Review syllabus
- Complete HW 1 (by midnight tomorrow)
- Read textbook sections 1.1 through 1.5
- Read *from A Fire On The Moon*

Basic Computer Model

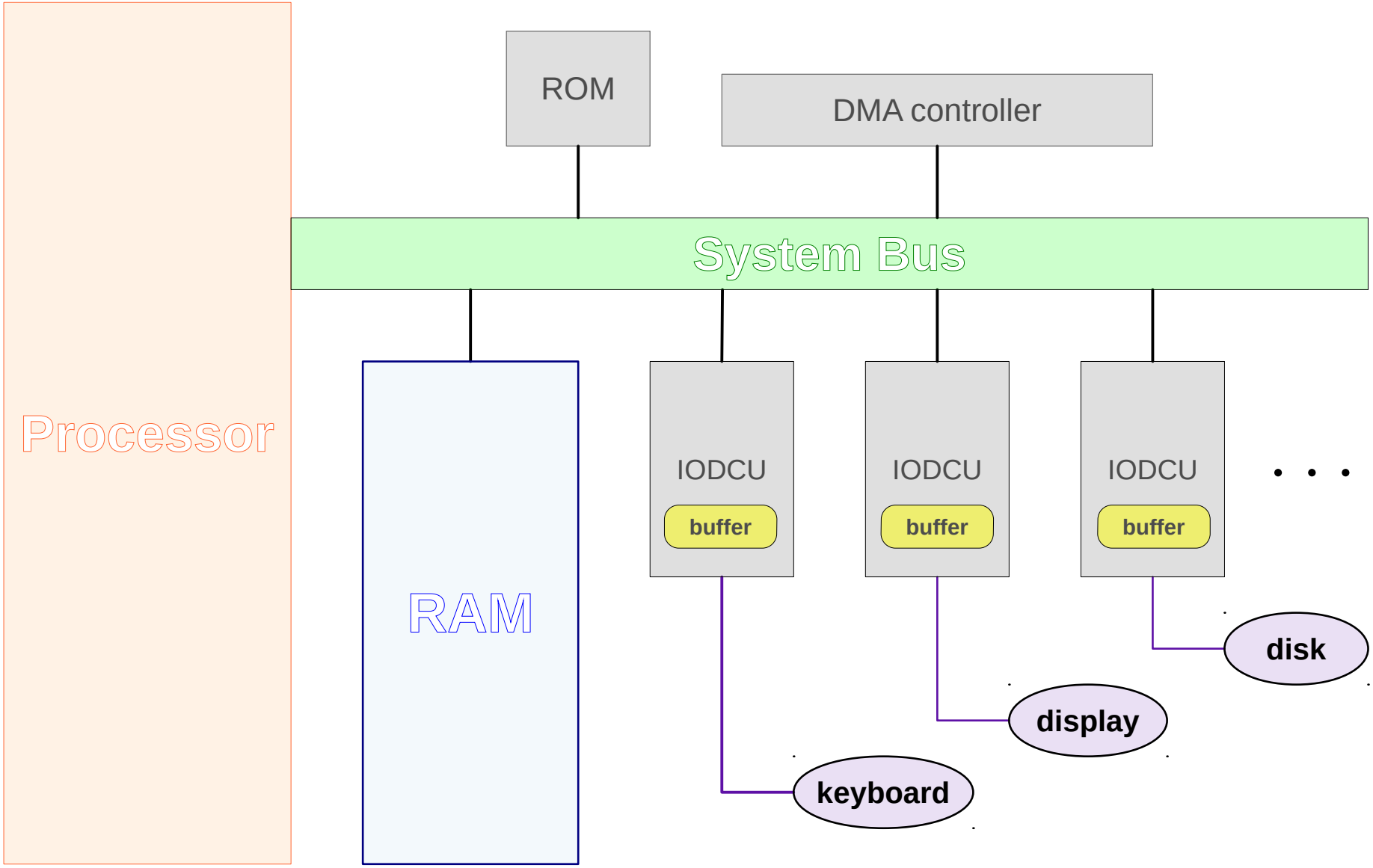

Basic Processor Model

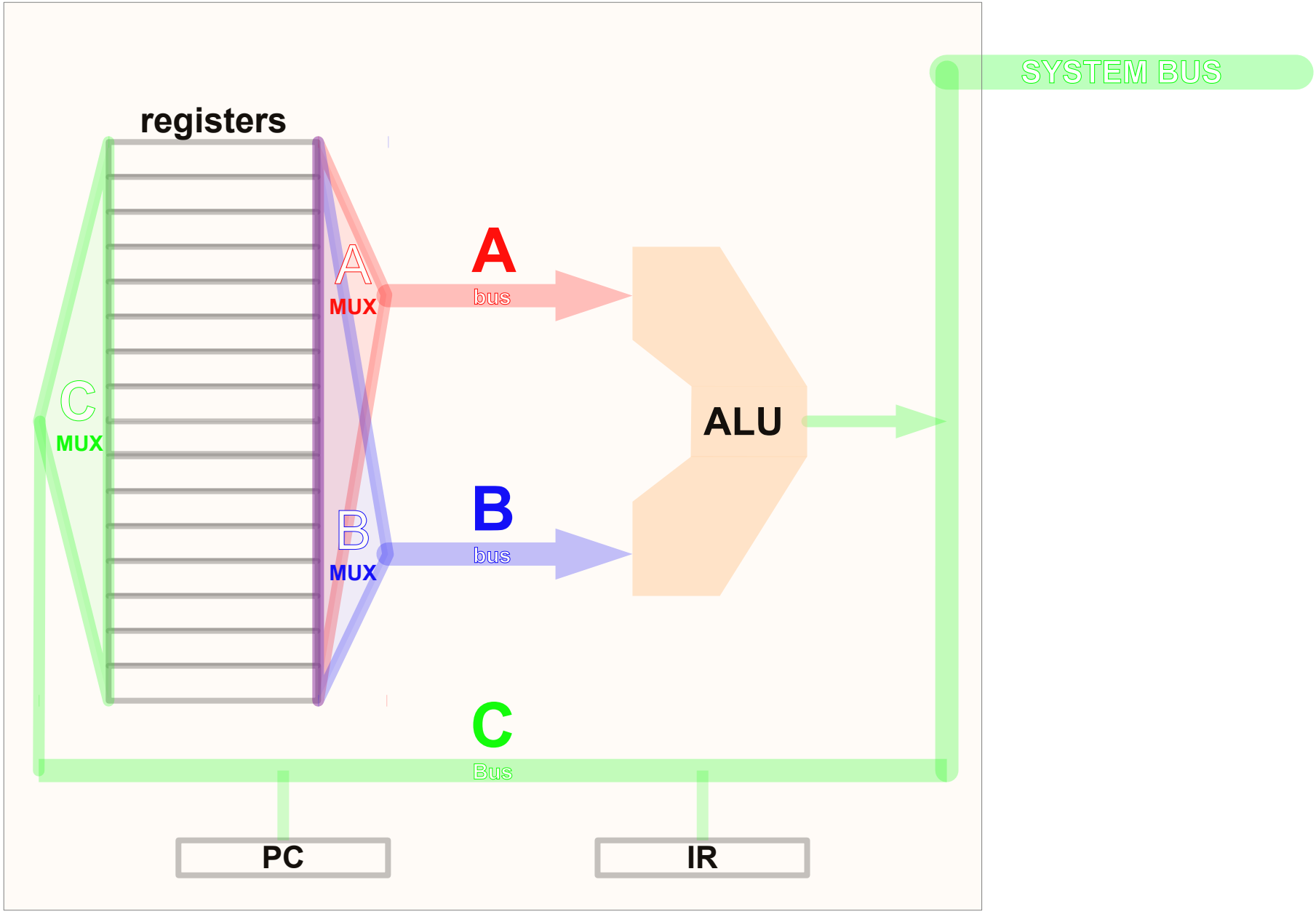

Kinds of Numbers

Counting	1, 2, 3, 4 …
Whole	… −4, −3, −2, −1, 0, 1, 2, 3, 4 …
Rational (fraction)	$-\frac{1}{8}$, $\frac{1}{3}$, $\frac{3}{2}$
Rational (decimal)	−0.25, $0.3\overline{3}$, 1.5, $2.1 \cdot 10^7$
Irrational	π, $\sqrt{2}$, $-\sqrt[3]{17}$, $e^{3\frac{1}{2}}$
Complex	i, $-3i$, $2 + 7i$, $2 - 7i$
Quaternion	$1 + i - j + k$, $-2 + 4i + 3j - k$

Kinds of Computer Numbers

Integers (fixed size, binary)

Unsigned (non-negative)

11001001_2 (201)

Signed (two's complement)

11001001_2 (–73)

00110111_2 (+73)

Floating-Point (fixed size, binary)

$+1.11001001 \bullet 2^{+0111}$, $-0.00000001 \bullet 2^{-1111}$

$+1.00011111 \bullet 2^{-0001} + 1.10101010 \bullet 2^{+0101}$¿

Sixteen Non-Negative Integers

		0	0b**0000**	0x**0**	*zero*
|	i	**1**	0b**0001**	0x**1**	*one*
||	ii	**2**	0b**0010**	0x**2**	*two*
|||	iii	**3**	0b**0011**	0x**3**	*three*
||||	iv	**4**	0b**0100**	0x**4**	*four*
卌	v	**5**	0b**0101**	0x**5**	*five*
卌 |	vi	**6**	0b**0110**	0x**6**	*six*
卌 ||	vii	**7**	0b**0111**	0x**7**	*seven*
卌 |||	viii	**8**	0b**1000**	0x**8**	*eight*
卌 ||||	ix	**9**	0b**1001**	0x**9**	*nine*
卌 卌	x	**10**	0b**1010**	0x**A**	*ten*
卌 卌 |	xi	**11**	0b**1011**	0x**B**	*eleven*
卌 卌 ||	xii	**12**	0b**1100**	0x**C**	*twelve*
卌 卌 |||	xiii	**13**	0b**1101**	0x**D**	*thirteen*
卌 卌 ||||	xiv	**14**	0b**1110**	0x**E**	*fourteen*
卌 卌 卌	xv	**15**	0b**1111**	0x**F**	*fifteen*

Four Hundred and Thirty Seven

$\mathbf{110110101_2}$	$\mathbf{437_{10}}$	$\mathbf{1B5_{16}}$
$1 \cdot 2^8 = 256$	$4 \cdot 10^2 = 100$	$1 \cdot 16^2 = 256$
$+ 1 \cdot 2^7 = 128$	$+ 3 \cdot 10^1 = 30$	$+ 11 \cdot 16^1 = 128$
$+ 0 \cdot 2^6 = 0$	$+ 7 \cdot 10^0 = 7$	$+ 5 \cdot 16^0 = 5$
$+ 1 \cdot 2^5 = 32$		
$+ 1 \cdot 2^4 = 16$		
$+ 0 \cdot 2^3 = 0$		
$+ 1 \cdot 2^2 = 4$		
$+ 0 \cdot 2^1 = 0$		
$+ 1 \cdot 2^0 = 1$		

Boolean Algebra

Constants: **0** and **1** (T and F)

Operators: **~** (not), **&** (and), **|** (or)

A	~
0	1
1	0

A	B	&
0	0	0
0	1	0
1	0	0
1	1	1

A	B	|
0	0	0
0	1	1
1	0	1
1	1	1